DRAWING NOTES: (ALL NOTES MAY NOT APPLY TO THIS SHEET)

1. EXISTING SLOPED ASPHALT PAVEMENT TO REMAIN AS IS
2. CONCRETE CURB -REFER TO CIVIL DRAWINGS FOR DETAIL-SEE PLAN FOR VARYING CURB HEIGHTS
3. PEMB SNOW CANOPY FOR TRUCKS
4. AUTOMATIC GATE OPERATOR
5. SLIDING GATE
6. 8" DIA CONCRETE FILLED BOLLARDS - REFER TO DETAILS
7. RAINWATER DRAIN W MANUAL VALVE
8. RELOCATED AV GAS SKID LOCATION - PROVIDED BY OWNER
9. 8'-0" TALL FENCING-REFER TO CIVIL DRAWINGS FOR LOCATIONS & TIE-IN
10. 20K GALLON FUEL STORAGE TANK W/ STEEL SUPPORT SADDLES SITTING ON CONCRETE FOUNDATIONS-REFER TO STRUCTURAL DRAWINGS
11. CONTAINMENT RAMP-REFER TO SECTION & DETAILS
12. HANGAR SIDE WALL
13. FOUNDATIONS-REFER TO STRUCTURAL DRAWINGS
14. GUTTER & DOWNSPOUT-REFER TO CIVIL DRAWINGS
15. CONTAINMENT AREA

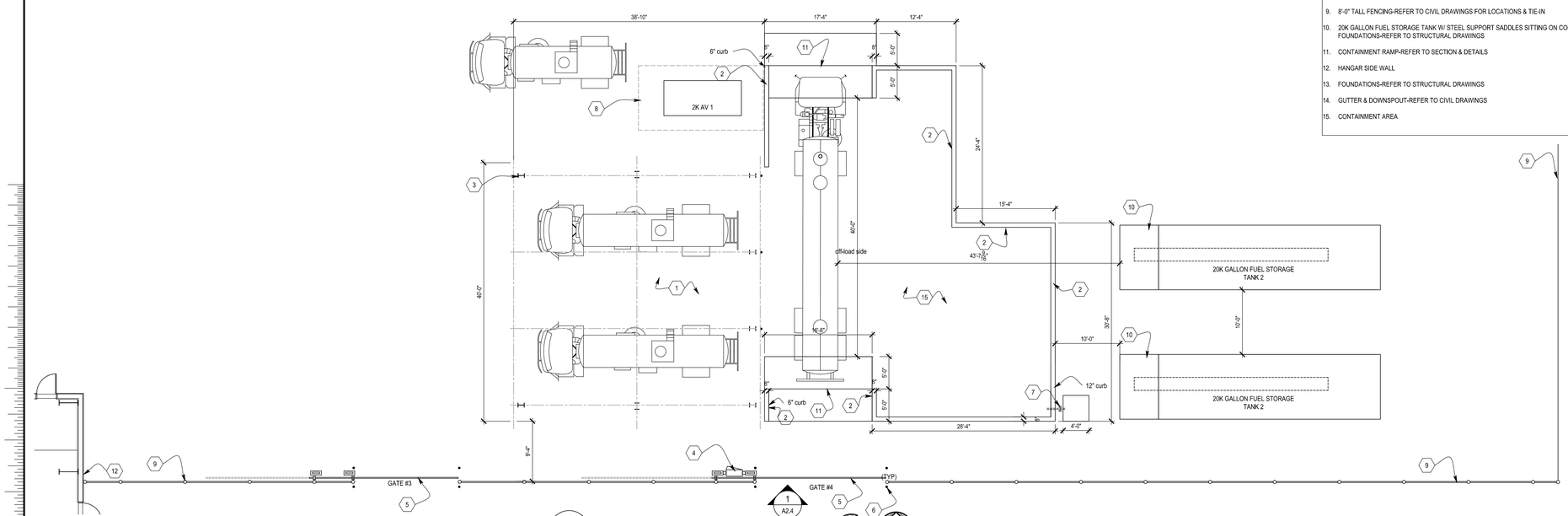

2 A2.4 FUEL FARM LAYOUT
SCALE: 1/8"=1'-0"

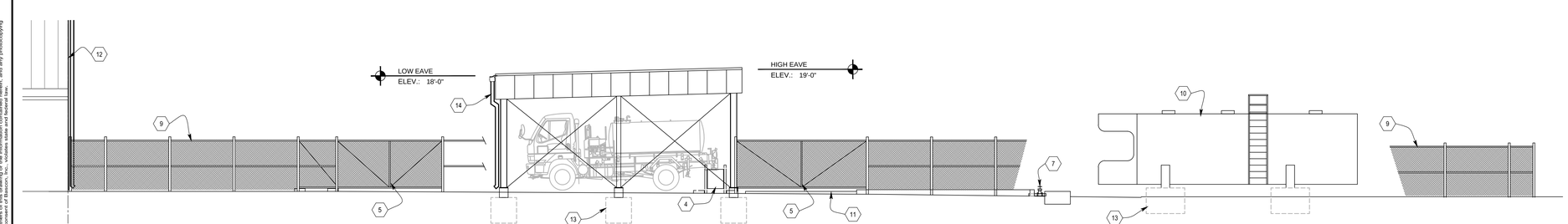

1 A2.4 EXTERIOR ELEVATION
SCALE: 1/8"=1'-0"

COPYRIGHT 2020 BY BASCON, INC.
This information contained in this drawing is the property of Bascon, Inc. and is licensed for use on the referenced project only and in accordance with the terms and conditions of the agreement between the Owner and Bascon, Inc. Copyright status and applicable state statutes, and any use for any other purpose other than the Project for which it is licensed and any onlayage, is prohibited without the express written consent of Bascon, Inc. Violators will be prosecuted to the full extent of the law. Any transmittal or reproduction of this drawing without the prior written consent of Bascon, Inc., violates state and federal law.

Scale For Reproduction
Millimeters
Inches

ISSUE

bascon
architects-engineers-developers
constructors-construction managers
BASCON, INC.
607-500 Redna Terrace
Cincinnati, Oh. 45215-1171
513/772-1674 FAX: 772-1684
Website: www.basconinc.com

ARCHITECTURAL
FUEL FARM PLAN & ELEVATIONS

FLIGHTSERV
HANGARS, SHOPS & OFFICES
TRENTON-MERCER AIRPORT, 1 JACK STEPHAN WAY
TRENTON, NJ 08628

STATE OF NEW JERSEY
MICHAEL R. ROSSI
20176
REGISTERED ARCHITECT

DATE 06-19-20
DRAWN BY SS
PROJECT NO. 180006
SHEET NO. A2.4